This report provided free of charge by:

Ryan Friedman Motor Cars, LLC

112 Glen St
Glen Cove, NY 11542

516-550-0358

★ **4.0 / 5.0**
7 Verified Reviews

Vehicle History Report™

US $44.99

1987 PORSCHE 911 CARRERA TURBO

VIN: WP0JB0930HS051333
COUPE
3.3L H6 F
GASOLINE
REAR WHEEL DRIVE
This CARFAX Report Provided by:
Ryan Friedman Motor Cars, LLC
★ **4.0 / 5.0**
7 Verified Reviews

- No accidents or damage reported to CARFAX
- **3** Service history records
- **10** Detailed records available
- **3,754** Last reported odometer reading

This CARFAX Vehicle History Report is based only on information supplied to CARFAX and available as of 7/3/23 at 9:59:05 PM (CDT). Other information about this vehicle, including problems, may not have been reported to CARFAX. Use this report as one important tool, along with a vehicle inspection and test drive, to make a better decision about your next used car.

Title History

CARFAX guarantees the information in this section

	Summary
Damage Brands Salvage | Junk | Rebuilt | Fire | Flood | Hail | Lemon	Guaranteed No Problem
Odometer Brands Not Actual Mileage | Exceeds Mechanical Limits	Guaranteed No Problem

GUARANTEED - None of these major title problems were reported by a state Department of Motor Vehicles (DMV). If you find that any of these title problems were reported by a DMV and not included in this report, CARFAX will buy this vehicle back.
View Certificate

Additional History

Not all accidents / issues are reported to CARFAX

	Summary
Total Loss No total loss reported to CARFAX.	No Issues Reported

Structural Damage No structural damage reported to CARFAX.	No Issues Reported
Airbag Deployment No airbag deployment reported to CARFAX.	No Issues Reported
Odometer Check No indication of an odometer rollback.	No Issues Indicated
Accident / Damage No accidents or damage reported to CARFAX.	No Issues Reported
Manufacturer Recall Check with an authorized Porsche dealer for any open recalls.	No Recalls Reported
Basic Warranty No data reported to CARFAX.	No Data Reported

CARFAX Detailed History

Date	Mileage	Source	Comments
07/19/1988		New York Motor Vehicle Dept. Huntington Station, NY	**Title issued or updated** - First owner reported - Loan or lien reported
09/23/1998	3,691	New York Inspection Station New York City Area	**Passed safety inspection** - Passed emissions inspection
12/05/2002	3,715	Jaguar of Huntington Huntington, NY 631-427-2222 jaguarhuntington.com	**Vehicle serviced** - Drivability/performance checked - Oil and filter changed - Brakes checked - Fuel filter replaced - Emissions or safety inspection performed
07/31/2003		New York Motor Vehicle Dept. Huntington, NY	**Title issued or updated** - New owner reported
10/21/2003		New York Motor Vehicle Dept. Huntington, NY	**Title issued or updated**
11/15/2004	3,729	Porsche of Huntington Huntington Station, NY 631-424-1301 sportique.com	**Vehicle serviced** - Oil and filter changed - Engine checked - Body electrical system checked - Cooling system checked - A/C system checked

			- Emissions or safety inspection performed
02/04/2005	3,733	New York Inspection Station	**Passed safety inspection** - Passed emissions inspection
03/31/2005		Jaguar Huntington Huntington, NY 631-427-2222 jaguarhuntington.com **4.4 / 5.0** 8 Verified Reviews	**Vehicle serviced** - Body electrical system checked - Cooling system checked - Engine checked - Oil and filter changed - Emissions or safety inspection performed
04/10/2023		New York Motor Vehicle Dept. Woodbury, NY	**Title issued or updated**
06/27/2023	3,754	Ryan Friedman Motor Cars, LLC Glen Clove, NY 516-712-9551 ryanfriedmanmotorcars.com **4.0 / 5.0** 7 Verified Reviews	**Vehicle offered for sale**
07/03/2023		CARFAX Car Care	**Manufacturer Recommended Maintenance Schedules**

Get this vehicle's maintenance schedule, service history and recall alerts at carfax.com/service.

Have Questions? Please visit our Help Center at www.carfax.com.

Glossary

First Owner
When the first owner(s) obtains a title from a Department of Motor Vehicles as proof of ownership.

Inspections
Many states or counties require annual or biennial emissions and/or safety inspections. Odometer readings are collected at the time of the inspection.

New Owner Reported
When a vehicle is sold to a new owner, the Title must be transferred to the new owner(s) at a Department of Motor Vehicles.

Ownership History
CARFAX defines an owner as an individual or business that possesses and uses a vehicle. Not all title transactions represent changes in ownership. To provide estimated number of owners, CARFAX proprietary technology analyzes all the events in a vehicle history. Estimated ownership is available for vehicles manufactured after 1991 and titled solely in the US including Puerto Rico. Dealers sometimes opt to take ownership of a vehicle and are required to in the following states: Maine, Massachusetts, New Jersey, Ohio, Oklahoma, Pennsylvania and South Dakota. Please consider this as you review a vehicle's estimated ownership history.

Title Issued
A state issues a title to provide a vehicle owner with proof of ownership. Each title has a unique number. Each title or registration record on a CARFAX report does not necessarily indicate a change in ownership. In Canada, a registration and bill of sale are used as proof of ownership.

Follow Us: **facebook.com/CARFAX** **@CARFAXinc** **About CARFAX**

CARFAX DEPENDS ON ITS SOURCES FOR THE ACCURACY AND RELIABILITY OF ITS INFORMATION. THEREFORE, NO RESPONSIBILITY IS ASSUMED BY CARFAX OR ITS AGENTS FOR ERRORS OR OMISSIONS IN THIS REPORT. CARFAX FURTHER EXPRESSLY DISCLAIMS ALL WARRANTIES, EXPRESS OR IMPLIED, INCLUDING ANY IMPLIED WARRANTIES OF MERCHANTABILITY OR FITNESS FOR A PARTICULAR PURPOSE.

SYSTEMATIC RETRIEVAL OF THE CONTENT OR OTHER DATA FROM THIS SITE TO CREATE OR COMPILE, DIRECTLY OR INDIRECTLY, IN WHOLE OR IN PART, A COLLECTION, COMPILATION, DATABASE OR DIRECTORY WITHOUT THE EXPRESS WRITTEN PERMISSION OF CARFAX IS STRICTLY PROHIBITED. THE CARFAX VEHICLE HISTORY REPORT IS SUBJECT TO THE CARFAX.COM TERMS OF USE.

© 2023 CARFAX, Inc., part of S&P Global. All rights reserved.
7/3/23 9:59:05 PM (CDT)

PORSCHE

PAINT METER READING

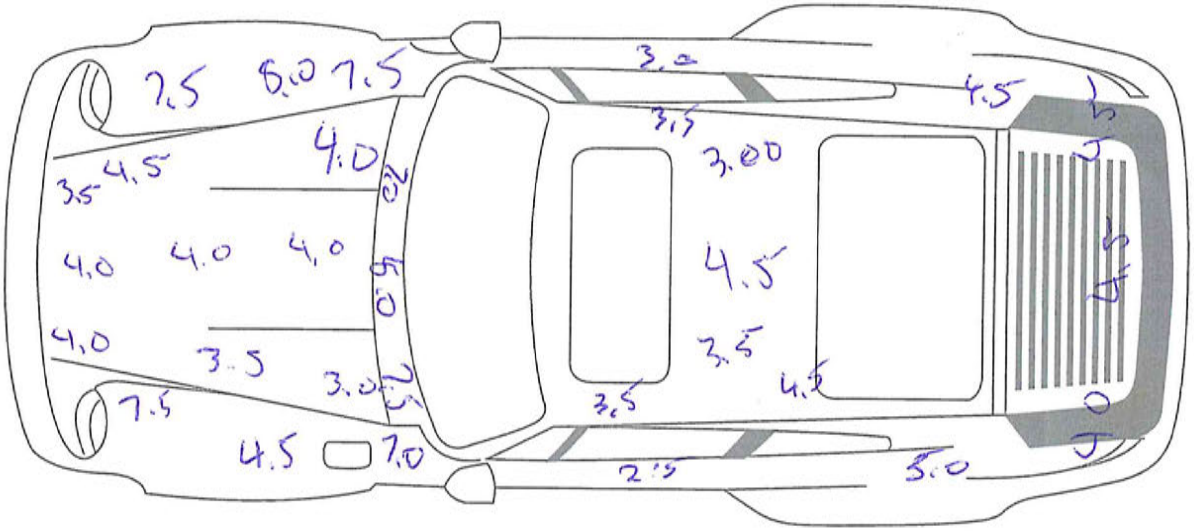

Top

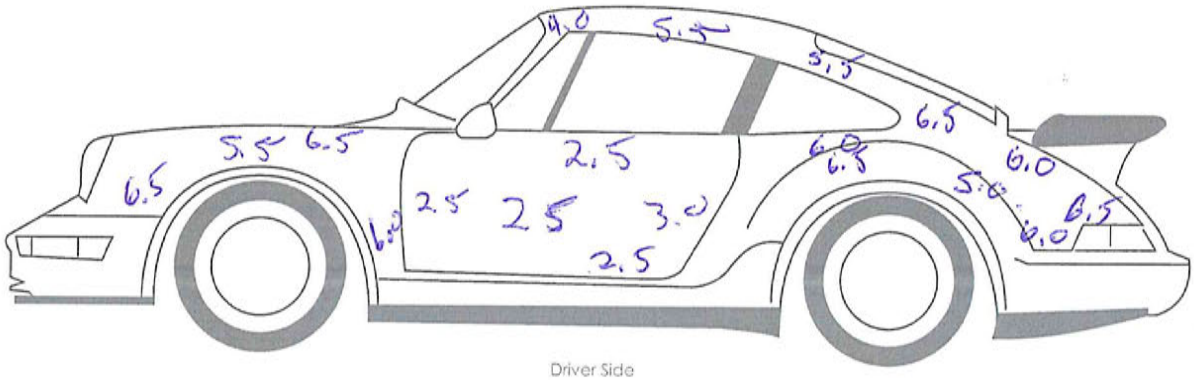

Driver Side

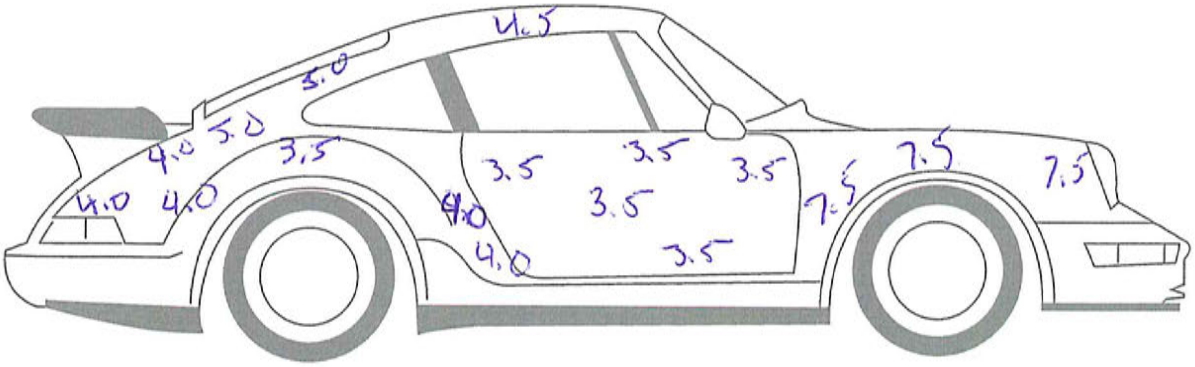

Passenger Side

July 5, 2023

PORSCHE
GOLD COAST

125 S. Service Road · Jericho, NY 11753
Main/Sales (516) 758-0800
Service (516) 758-0888 · Parts (516) 758-0880
www.porschegoldcoast.com

ALL CLAIMS AND RETURNED GOODS MUST BE ACCOMPANIED BY THIS INVOICE.
NO RETURNS ON ELECTRICAL OR SPECIAL ORDER PARTS.
NO RETURNS AFTER 30 DAYS. 20% RE-STOCK CHARGE ON ALL RETURNED PARTS.
$50.00 ADMINISTRATIVE FEE FOR RETURNED CHECKS.

DISCLAIMER OF WARRANTIES

Any warranties on the product sold hereby are those made by the manufacturer. The seller hereby expressly disclaims all warranties, either express or implied, including any implied warranty of merchantability or fitness for a particular purpose, and the seller neither assumes nor authorizes any other person to assume for it any liability in connection with the sale of said products.

DATE ENTERED	YOUR ORDER NO.	DATE SHIPPED	INVOICE DATE	INVOICE NUMBER
23 SEP 22		23 SEP 22	23 SEP 22	70560

SOLD TO: ACCOUNT NO. 99
CASH/RETAIL

SHIP TO:

PAGE 1 OF 1

SHIP VIA	SLSM.	B/L NO.	TERMS	F.O.B. POINT
	749		CASH DUE	JERICHO NY

QUANTITY ORD.	SHIP	B.O.	PART NO.	DESCRIPTION	LIST	NET	AMOUNT
2	2	0	911-511-331-00	HOOD GA	53.44	53.44	106.88

Thank You For Your Business!

****
HANK YOU FOR YOUR PATRONAGE
he PARTS Team
516)758-0880
****

PARTS	106.88
SUBLET	
FREIGHT	0.00
SALES TAX	9.22
TOTAL	$116.10

CUSTOMER'S SIGNATURE
X

x1pi1.100_1
ight 2014 CDK Global, LLC PARTS INVOICE 1UP - P/3C1 - IMAGING

CUSTOMER COPY

SPORTIQUE PORSCHE OF HUNTINGTON

Authorized Porsche Dealer
855 E. Jericho Turnpike Huntington Station, NY 11746
(631) 424-1307
http://www.sportique.com
http://www.porschepaddock.com

[redacted]

ADVISOR	TAG NO.	INVOICE DATE	INVOICE NO.
WILLIAM DICKHUT 26	2034	03/01/05	POCS38223
LABOR RATE / LICENSE NO. XYS240	MILEAGE 3,729	COLOR RED/	STOCK NO.
YEAR / MAKE / MODEL 87/PORSCHE/911		DELIVERY DATE 04/30/88	DELIVERY MILES 0
VEHICLE I.D. NO. W P 0 J B 0 9 3 0 H S 0 5 1 3 3 3		SELLING DEALER NO.	PRODUCTION DATE 05/07/87
F. T. E. NO.	P. O. NO.	R. O. DATE 11/15/04	
COMMENTS			MO: 3730

JOB# 1 CHARGES

LABOR

J# 1 11POZ ENGINE MINOR HOURS: 45.00 TECH(S):70 4725.00

CUSTOMER STATES SMOKE ENTERING COCKPIT OF CAR ON PASSENGER SIDE OF CAR WHILE CAR IS RUNNING-CAR TOWED IN BY ROBS CHECK CAR,ENGINE IS LEAKING OIL AND HEATER BOX NEEDS TO BE REPLACED,R/R ENGINE FROM CAR,RESEAL LEAKING HEADS,REPLACE LEFT SIDE HEATER BOX,REPLACE ALL LEAKING GASKETS,REPLACE PLUGS AND FILTERS-OLD AND CONTAMINATED-RESEAL LEAKING TRANSMISSION AS WELL,CHANGE OIL TOO.

PARTS QTY	FP-NUMBER	DESCRIPTION	UNIT PRICE	
1	000-043-010-00	NR-LOCTITE 574 5	35.62	35.62
1	930-100-908-02	ENGINE GASKET SE	320.40	320.40
4	930-107-040-01	ENG OIL TUBE	52.55	210.20
6	999-085-001-02	8MM EXHAUST NUT	6.03	36.18
6	900-910-097-02	NUT M8	2.76	16.56
1	930-107-233-02	OIL HOSE	35.84	35.84
2	999-512-091-00	HOSE SCREW CLAMP	21.76	43.52
1	930-211-196-00	HOT AIR TUBE	5.52	5.52
4	999-512-349-02	HOSE SCREW CLAMP	3.15	12.60
6	999-170-128-90	SPARK PLUG	22.10	132.60
1	901-211-194-00	HOT AIR TUBE	18.92	18.92
34	900-084-004-02	NUT M8	0.58	19.72
2	999-701-690-40	RUBBER O-RING	3.90	7.80
1	999-707-315-40	RUBBER O-RING	2.61	2.61
6	999-084-052-02	LOCKING NUT 8M	3.02	18.12
6	900-074-287-02	HXHD BOLT 8X35	6.39	38.34
1	930-300-911-00	TRANS.GASKET SET	104.95	104.95
1	900-068-004-02	STUD M8 X 45	4.17	4.17
1	930-113-187-01	ANGLE BRACKET	26.48	26.48
4	999-917-546-00	ORMD-TRANSAXLE O	29.57	118.28
1	930-110-185-02	AIR FILTER	55.35	55.35
		TOTAL - PARTS		1263.78

SUBLET PO#	VEND INV#	INV.DATE	DESCRIPTION	
2167	04427	02/16/05	TOWING	156.00
			TOTAL - SUBLET	156.00

JOB# 1 TOTALS

LABOR	4725.00
PARTS	1263.78
SUBLET	156.00
JOB# 1 JOURNAL PREFIX POCS JOB# 1 TOTAL	6144.78

JOB# 2 CHARGES

LABOR

J# 2 00POZ OIL SPECIAL HOURS: TECH(S):70 0.00

PERFORM OIL SERVICE
PERFORMED OIL SERVICE
SEE LINE 1 FOR WORK

ANY WARRANTIES ON THE PRODUCT SOLD HEREBY ARE THOSE MADE BY THE MANUFACTURER. THE SELLER HEREBY EXPRESSLY DISCLAIMS ALL WARRANTIES, EITHER EXPRESS OR IMPLIED, INCLUDING ANY IMPLIED WARRANTY OF MERCHANTABILITY OR FITNESS FOR A PARTICULAR PURPOSE, AND NEITHER ASSUMES NOR AUTHORIZES ANY OTHER PERSON TO ASSUME FOR IT ANY LIABILITY IN CONNECTION WITH THE SALE OF SAID PRODUCTS.

THESE REPAIRS ARE COVERED BY A LIMITED WARRANTY. LABOR AND PARTS FOR 90 DAYS OR 4000 MILES, WHICHEVER COMES FIRST. WARRANTY REPAIRS TO BE PERFORMED AT SELLER'S PLACE OF BUSINESS.

SELLER HEREBY LIMITS IMPLIED WARRANTIES TO THE PERIOD STATED.

N.Y.S. Reg. Repair Shop No. R 7088918

VEHICLES LEFT AFTER 24 HOURS FROM COMPLETION OF REPAIRS WILL ACCRUE STORAGE CHARGES OF $25.00 A DAY.

TERMS: STRICTLY C.O.D. OR PRIOR APPROVED CREDIT CARD ON BALANCE OVER $2000.00.

X

CUSTOMER ACKNOWLEDGES RECEIPT OF COPY

☐ TELEPHONE AUTHORIZATION APPROVED

Thank you

for this opportunity to serve you.

CUSTOMER COPY

[CONTINUED ON NEXT PAGE] 03:52pm

Copyright © 1990 The Reynolds and Reynolds Company
ERAINTINVE SF005306 (12/01)

SPORTIQUE PORSCHE OF HUNTINGTON

Authorized Porsche Dealer
855 E. Jericho Turnpike Huntington Station, NY 11746
(631) 424-1307
http://www.sportique.com
http://www.porschepaddock.com

[redacted]

ADVISOR	TAG NO.	INVOICE DATE	INVOICE NO.
WILLIAM DICKHUT 26	2034	03/01/05	POCS38223
LABOR RATE / LICENSE NO. XYS240	MILEAGE 3,729	COLOR RED/	STOCK NO.
YEAR / MAKE / MODEL 87/PORSCHE/911		DELIVERY DATE 04/30/88	DELIVERY MILES 0
VEHICLE I.D. NO. WP0JB0930HS051333		SELLING DEALER NO.	PRODUCTION DATE 05/07/87
F. T. E. NO.	P. O. NO.	R. O. DATE 11/15/04	
COMMENTS			MO: 3730

JOB# 2 TOTALS----------

JOB# 2 JOURNAL PREFIX POCS JOB# 2 TOTAL 0.00

JOB# 3 CHARGES----------

LABOR----------

J# 3 03POZ STATE INSPECTION HOURS: 0.50 TECH(S):70 31.00
PERFORM NYSI
PERFORMED NYSI

MISC------CODE--------DESCRIPTION----------CONTROL NO---------

SI NYSI STICKER 6.00

TOTAL - MISC 6.00

JOB# 3 TOTALS----------

LABOR 31.00
MISC 6.00

JOB# 3 JOURNAL PREFIX POCS JOB# 3 TOTAL 37.00

JOB# 4 CHARGES----------

LABOR----------

J# 4 51POZ BODY ELECTRICAL HOURS: TECH(S):70 0.00
CUSTOMER STATES RADIO DIPLAY IS NOT WORKING
RADIO NEEDS TO BE REPLACED-PARTS N/A

JOB# 4 TOTALS----------

JOB# 4 JOURNAL PREFIX POCS JOB# 4 TOTAL 0.00

JOB# 5 CHARGES----------

LABOR----------

J# 5 20POZ COOLING SYSTEM HOURS: TECH(S):70 0.00
CUSTOMER STATES CHECK HEATING AND A/C SYSTEMS
REPLACE LEFT SIDE HEATER BOX.CHECK A/C SYSTEM-NEEDS
TO STYLE A/C SYSTEM-PARTS N/A.

PARTS------QTY---FP-NUMBER----------DESCRIPTION----------UNIT PRICE-

1 930-211-033-01 HEAT EXCHANGER 1189.48 1189.48

TOTAL - PARTS 1189.48

JOB# 5 TOTALS----------

PARTS 1189.48

JOB# 5 JOURNAL PREFIX POCS JOB# 5 TOTAL 1189.48

JOB# 6 CHARGES----------

LABOR----------

J# 6 51POZ01 BODY ELECT CONCERN HOURS: 1.50 TECH(S):70 153.00
CUSTOMER STATES REAR LID WILL NOT STAY OPEN
R/R REAR HOOD SHOCKS AND REPLACE.DONE.

PARTS------QTY---FP-NUMBER----------DESCRIPTION----------UNIT PRICE-

2 911-512-331-02 DECK LID GAS STR 34.26 68.52

ANY WARRANTIES ON THE PRODUCT SOLD HEREBY ARE THOSE MADE BY THE MANUFACTURER. THE SELLER HEREBY EXPRESSLY DISCLAIMS ALL WARRANTIES, EITHER EXPRESS OR IMPLIED, INCLUDING ANY IMPLIED WARRANTY OF MERCHANTABILITY OR FITNESS FOR A PARTICULAR PURPOSE, AND NEITHER ASSUMES NOR AUTHORIZES ANY OTHER PERSON TO ASSUME FOR IT ANY LIABILITY IN CONNECTION WITH THE SALE OF SAID PRODUCTS.

THESE REPAIRS ARE COVERED BY A LIMITED WARRANTY, LABOR AND PARTS FOR 90 DAYS OR 4000 MILES, WHICHEVER COMES FIRST. WARRANTY REPAIRS TO BE PERFORMED AT SELLER'S PLACE OF BUSINESS.

SELLER HEREBY LIMITS IMPLIED WARRANTIES TO THE PERIOD STATED.

N.Y.S. Reg. Repair Shop No. R 7088918

VEHICLES LEFT AFTER 24 HOURS FROM COMPLETION OF REPAIRS WILL ACCRUE STORAGE CHARGES OF $25.00 A DAY.

TERMS: STRICTLY C.O.D. OR PRIOR APPROVED CREDIT CARD ON BALANCE OVER $2000.00.

X

CUSTOMER ACKNOWLEDGES RECEIPT OF COPY

☐ TELEPHONE AUTHORIZATION APPROVED

Thank you
for this opportunity to serve you.

CUSTOMER COPY

[CONTINUED ON NEXT PAGE] 03:52pm

Copyright © 1998 The Reynolds and Reynolds Company
ERAINTINVE SF605360 (12/01)

SPORTIQUE PORSCHE OF HUNTINGTON

Authorized Porsche Dealer
855 E. Jericho Turnpike Huntington Station, NY 11746
(631) 424-1307
http://www.sportique.com
http://www.porschepaddock.com

[redacted]

ADVISOR		TAG NO.	INVOICE DATE	INVOICE NO.
WILLIAM DICKHUT 26		2034	03/01/05	POCS38223
LABOR RATE	LICENSE NO. XYS240	MILEAGE 3,729	COLOR RED/	STOCK NO.
YEAR / MAKE / MODEL 87/PORSCHE/911			DELIVERY DATE 04/30/88	DELIVERY MILES 0
VEHICLE I.D. NO. W P 0 J B 0 9 3 0 H S 0 5 1 3 3 3			SELLING DEALER NO.	PRODUCTION DATE 05/07/87
F. T. E. NO.	P. O. NO.		R. O. DATE 11/15/04	
COMMENTS				MO: 3730

TOTAL - PARTS	68.52
JOB# 6 TOTALS----------	
LABOR	153.00
PARTS	68.52
JOB# 6 JOURNAL PREFIX POCS JOB# 6 TOTAL	221.52
TOTALS----------	
TOTAL LABOR....	4909.00
TOTAL PARTS....	2521.78
TOTAL SUBLET...	156.00
TOTAL G.O.G....	0.00
TOTAL MISC CHG.	6.00
TOTAL MISC DISC	0.00
TOTAL TAX.....	661.14
TOTAL INVOICE $	**8253.92**

****
* [ ] CASH [ ] CHECK CK NO. [ ] *
* [ ] VISA [ ] MASTERCARD [ ] DISCOVER *
* [ ] AMER XPRESS [ ] OTHER [ ] CHARGE *
****

THANK YOU FOR YOUR BUSINESS!!
SPORTIQUE PORSCHE OF HUNTINGTON

CUSTOMER SIGNATURE

ANY WARRANTIES ON THE PRODUCT SOLD HEREBY ARE THOSE MADE BY THE MANUFACTURER. THE SELLER HEREBY EXPRESSLY DISCLAIMS ALL WARRANTIES, EITHER EXPRESS OR IMPLIED, INCLUDING ANY IMPLIED WARRANTY OF MERCHANTABILITY OR FITNESS FOR A PARTICULAR PURPOSE, AND NEITHER ASSUMES NOR AUTHORIZES ANY OTHER PERSON TO ASSUME FOR IT ANY LIABILITY IN CONNECTION WITH THE SALE OF SAID PRODUCTS.

THESE REPAIRS ARE COVERED BY A LIMITED WARRANTY, LABOR AND PARTS FOR 90 DAYS OR 4000 MILES, WHICHEVER COMES FIRST. WARRANTY REPAIRS TO BE PERFORMED AT SELLER'S PLACE OF BUSINESS.

SELLER HEREBY LIMITS IMPLIED WARRANTIES TO THE PERIOD STATED.

N.Y.S. Reg. Repair Shop No. R 7088918

VEHICLES LEFT AFTER 24 HOURS FROM COMPLETION OF REPAIRS WILL ACCRUE STORAGE CHARGES OF $25.00 A DAY.

TERMS: STRICTLY C.O.D. OR PRIOR APPROVED CREDIT CARD ON BALANCE OVER $2000.00.

X

CUSTOMER ACKNOWLEDGES RECEIPT OF COPY

☐ TELEPHONE AUTHORIZATION APPROVED

Thank you
for this opportunity to serve you.

CUSTOMER COPY

[END OF INVOICE] 03:52pm

Copyright © 1998 The Reynolds and Reynolds Company
ERAINTINVE SF605366 (12/01)

SPORTIQUE
PORSCHE of Huntington

855 East Jericho Turnpike, Huntington, NY 11743-5697
phone 631.424.1307 fax 631.424.?312
www.sportique.com service@sportique.com

Dear Valued Customer,

Within a short time, Porsche will be sending you **a New Service Survey**. It is very important to us that you answer: **"10"** or **"YES"** indicating that you were **COMPLETELY SATISFIED**

If you cannot answer **"10"** or **"YES"** to **ALL** of the questions, it would mean I have not done my job and that would **NEGATIVELY AFFECT** my personal Report Card and the dealership's rating with Porsche.

If anything was not the way you expected, please allow us to address it **IMMEDIATELY, BEFORE YOU RETURN THE SURVEY TO PORSCHE**, or call me at (631) 424-1307 or (631) 427-2708.

Thank you very much,

Perry Zito, Service Manager
Bill Dickhut, Customer Relations Manager
Sportique Porsche of Huntington

SAMPLE SURVEY:

THIS IS WHAT PORSCHE CARS WILL BE ASKING YOU:

CUSTOMER COMMITMENT - NEW SERVICE QUESTIONS

# QUESTION	RATING
1. How would you rate the ease and convenience of getting your vehicle scheduled for service?	10
HOW WOULD YOU RATE YOUR SERVICE ADVISOR ON THE FOLLOWING: (Questions 2-5)	
2. Treated you with courtesy and respect?	10
3. The amount of time taken to understand your needs?	10
4. Fulfilled all commitments made to you?	10
5. The explanation of repairs to your vehicle?	10
CONSIDERING YOUR ENTIRE EXPERIENCE AT THE DEALERSHIP	
6. How would you rate the promptness in getting the repairs completed?	10
6a. If your service was delayed, was the delay due to the availability of the parts needed to complete the required repairs?	YES
7. How would you rate your satisfaction with the quality of work performed?	10
8. Based on your expectations, how would you rate the value of the service you received?	10
9. Overall, were you treated the way you wanted to be treated?	YES
10. How would you rate your overall service experience at Sportique Porsche of Huntington?	10
11. How likely are you to recommend this dealership?	10

SCORING: Rating questions calculated ona scale of 1-10; where 10 is the highest and 1 is the lowest.

SPORTIQUE PORSCHE OF HUNTINGTON

Authorized Porsche Dealer
855 E. Jericho Turnpike Huntington Station, NY 11746
(631) 424-1307
http://www.sportique.com
http://www.porschepaddock.com

[redacted]

ADVISOR	TAG NO.	INVOICE DATE	INVOICE NO.
WILLIAM DICKHUT 26	3751	02/04/03	POCS10935
LABOR RATE / LICENSE NO. XYS240	MILEAGE 3,715	COLOR RED/	STOCK NO.
YEAR / MAKE / MODEL 87/PORSCHE/911		DELIVERY DATE 04/30/88	DELIVERY MILES 0
VEHICLE I.D. NO. WP0JB0930HS051333		SELLING DEALER NO.	PRODUCTION DATE 05/07/87
F. T. E. NO.	P. O. NO.	R. O. DATE 12/05/02	REPRINT# 1
COMMENTS			MO: 3720

JOB# 1 CHARGES----------

LABOR----------

J# 1 10POZ DRIVEABILITY HOURS: 13.50 TECH(S):39 1336.50

CUSTOMER STATES CAR CRANKS BUT WILL NOT START,CAR MIGHT BE LOW ON FUEL,CAR TOWED BY ROBS PRO TOW
CK NO START,R/R SPARK PLUG CONNECTORS AND CK FOR SPARK,OK,CK FUSE FOR FUEL PUMPS,OK,CK ALL RELAYS,OK,CK OPERATION OF FUEL PUMPS.BOTH FUEL PUMPS ARE SEIZED,R/R BOTH FUEL PUMPS AND REPLACE,REPLACE FUEL FILTER,R/R INTERCOOLER, R/R AIR FILTER,R/R AIR INTAKE MANIFOLD,REMOVE FUEL DISTRIBUTOR ASSEMBLY-THIS PART IS ALSO SEIZED-NEW PART IS NOT AVALIABLE FROM P.C.N.A.-REBUILD PART-H AND R FUEL INJECTION,INC. REBUILT FUEL DISTRIBUTOR,CLEANED 6 FUEL INJECTORS AND WARM UP REGULATOR,R/R AIR PUMP, R/R FUEL INJECTORS-INJECTORS CLOGGED-REMOVE WARM UP REGULATOR,SEND PARTS OUT FOR REPAIR-REINSTALL FUEL DISTRIBUTOR,INSTALL INJECTORS,INSTALL NEW FUEL PRESSURE REGULATOR,INSTALL AIR PUMP,CLEAN FUEL TANK(FUEL TANK MAY NEED REPLACING IN THE FUTURE),ADJUST FUEL MIXTURE AND DRIVE CAR,DONE.

PARTS------QTY	FP-NUMBER	DESCRIPTION	UNIT PRICE	
2	930-608-113-00	FUEL PUMP	499.59	999.18
1	911-608-102-02	FUEL PUMP	301.53	301.53
1	928-110-253-06	FUEL FILTER	39.42	39.42
1	930-606-105-06	WARM-UP REGULATO	681.69	681.69
1	477-133-071-A	FUEL VALVE	409.43	409.43
1	999-701-473-40	RUBBER O-RING	8.55	8.55
1	951-356-557-00	FUEL HOSE	18.14	18.14
			TOTAL - PARTS	2457.94

SUBLET-----PO#	VEND INV#	INV.DATE	DESCRIPTION	
10935		12/06/02	TOWING	130.00
1093		01/22/03	REBUILDING PARTS	1237.60
			TOTAL - SUBLET	1367.60

JOB# 1 TOTALS----------

LABOR	1336.50
PARTS	2457.94
SUBLET	1367.60
JOB# 1 JOURNAL PREFIX POCS JOB# 1 TOTAL	5162.04

JOB# 2 CHARGES----------

LABOR----------

J# 2 00POZ OIL SPECIAL HOURS: 1.00 TECH(S):39 99.00

PERFORM OIL SERVICE
AND CK AND REPORT ON ALL OTHER FLUIS AND FILTERS
PERFORMED OIL SERVICE

PARTS------QTY	FP-NUMBER	DESCRIPTION	UNIT PRICE	
11	E45P	AGIP 10/40 OIL	2.48	27.28
1	900-123-118-30	ALUM SEAL RING	0.66	0.66
1	900-123-011-20	SEAL RING	0.72	0.72

ANY WARRANTIES ON THE PRODUCT SOLD HEREBY ARE THOSE MADE BY THE MANUFACTURER. THE SELLER HEREBY EXPRESSLY DISCLAIMS ALL WARRANTIES, EITHER EXPRESS OR IMPLIED, INCLUDING ANY IMPLIED WARRANTY OF MERCHANTABILITY OR FITNESS FOR A PARTICULAR PURPOSE, AND NEITHER ASSUMES NOR AUTHORIZES ANY OTHER PERSON TO ASSUME FOR IT ANY LIABILITY IN CONNECTION WITH THE SALE OF SAID PRODUCTS.

THESE REPAIRS ARE COVERED BY A LIMITED WARRANTY, LABOR AND PARTS FOR 90 DAYS OR 4000 MILES, WHICHEVER COMES FIRST. WARRANTY REPAIRS TO BE PERFORMED AT SELLER'S PLACE OF BUSINESS.

SELLER HEREBY LIMITS IMPLIED WARRANTIES TO THE PERIOD STATED.

N.Y.S. Reg. Repair Shop No. R 7088918

VEHICLES LEFT AFTER 24 HOURS FROM COMPLETION OF REPAIRS WILL ACCRUE STORAGE CHARGES OF $25.00 A DAY.

TERMS: STRICTLY C.O.D. OR PRIOR APPROVED CREDIT CARD ON BALANCE OVER $2000.00.

X

CUSTOMER ACKNOWLEDGES RECEIPT OF COPY

☐ TELEPHONE AUTHORIZATION APPROVED

Thank you
for this opportunity to serve you.

FORM E/UA-LZFI-A14 (12-98) Reynolds and Reynolds TO ORDER: www.reysoun... com; 1-800-344-0966; fax 1-800-531-8055

 CUSTOMER COPY [CONTINUED ON NEXT PAGE] 14:31:09

Copyright © 1998 The Reynolds and Reynolds Company
ERAINTINVE SF605360 (12/01)

SPORTIQUE PORSCHE OF HUNTINGTON

Authorized Porsche Dealer
855 E. Jericho Turnpike Huntington Station, NY 11746
(631) 424-1307
http://www.sportique.com
http://www.porschepaddock.com

[redacted]

ADVISOR	TAG NO.	INVOICE DATE	INVOICE NO.
WILLIAM DICKHUT 26	3751	02/04/03	POCS10935
LABOR RATE / LICENSE NO. XYS240	MILEAGE 3,715	COLOR RED/	STOCK NO.
YEAR / MAKE / MODEL 87/PORSCHE/911		DELIVERY DATE 04/30/88	DELIVERY MILES 0
VEHICLE I.D. NO. WP0JB0930HS051333		SELLING DEALER NO.	PRODUCTION DATE 05/07/87
F. T. E. NO. / P. O. NO.		R. O. DATE 12/05/02	REPRINT# 1
COMMENTS			MO: 3720

PARTS------QTY---FP-NUMBER----------	DESCRIPTION----------	UNIT PRICE-	
1 930-107-764-01	OIL FILTER	9.68	9.68
		TOTAL - PARTS	38.34
JOB# 2 TOTALS----------			
		LABOR	99.00
		PARTS	38.34
	JOB# 2 JOURNAL PREFIX POCS	JOB# 2 TOTAL	137.34
JOB# 3 CHARGES----------			
LABOR----------			
J# 3 03POZ	STATE INSPECTION HOURS: 0.50 TECH(S):39		35.00
PERFORM NYSI			
PERFORMED NYSI			
JOB# 3 TOTALS----------			
		LABOR	35.00
	JOB# 3 JOURNAL PREFIX POCS	JOB# 3 TOTAL	35.00
JOB# 4 CHARGES----------			
LABOR----------			
J# 4 40POZ	BRAKES HOURS: 1.50 TECH(S):39		145.59
CUSTOMER STATES PERFORM BRAKE FLUID FLUSH			
COMPLETED			
PARTS------QTY---FP-NUMBER----------	DESCRIPTION----------	UNIT PRICE-	
1 000-043-203-66	ORMD-BRAKE FLUID	34.29	34.29
		TOTAL - PARTS	34.29
JOB# 4 TOTALS----------			
		LABOR	145.59
		PARTS	34.29
	JOB# 4 JOURNAL PREFIX POCS	JOB# 4 TOTAL	179.88

ANY WARRANTIES ON THE PRODUCT SOLD HEREBY ARE THOSE MADE BY THE MANUFACTURER. THE SELLER HEREBY EXPRESSLY DISCLAIMS ALL WARRANTIES, EITHER EXPRESS OR IMPLIED, INCLUDING ANY IMPLIED WARRANTY OF MERCHANTABILITY OR FITNESS FOR A PARTICULAR PURPOSE, AND NEITHER ASSUMES NOR AUTHORIZES ANY OTHER PERSON TO ASSUME FOR IT ANY LIABILITY IN CONNECTION WITH THE SALE OF SAID PRODUCTS.

THESE REPAIRS ARE COVERED BY A LIMITED WARRANTY, LABOR AND PARTS FOR 90 DAYS OR 4000 MILES, WHICHEVER COMES FIRST. WARRANTY REPAIRS TO BE PERFORMED AT SELLER'S PLACE OF BUSINESS.

SELLER HEREBY LIMITS IMPLIED WARRANTIES TO THE PERIOD STATED.

N.Y.S. Reg. Repair Shop No. R 7088918

VEHICLES LEFT AFTER 24 HOURS FROM COMPLETION OF REPAIRS WILL ACCRUE STORAGE CHARGES OF $25.00 A DAY.

TERMS: STRICTLY C.O.D. OR PRIOR APPROVED CREDIT CARD ON BALANCE OVER $2000.00.

X

CUSTOMER ACKNOWLEDGES RECEIPT OF COPY

☐ TELEPHONE AUTHORIZATION APPROVED

Thank you
for this opportunity to serve you.

FORM ERA-LZR-A14 (12-98) Reynolds and Reynolds TO ORDER: www.reysource.com; 1-800-344-0996; fax 1-800-531-9555

CUSTOMER COPY

[CONTINUED ON NEXT PAGE] 14:31:09

Copyright © 1998 The Reynolds and Reynolds Company
ERAINTINVE SF605360 (12/01)

SPORTIQUE PORSCHE OF HUNTINGTON

Authorized Porsche Dealer
855 E. Jericho Turnpike Huntington Station, NY 11746
(631) 424-1307
http://www.sportique.com
http://www.porschepaddock.com

[redacted]

ADVISOR		TAG NO.	INVOICE DATE	INVOICE NO.
WILLIAM DICKHUT 26		3751	02/04/03	POCS10935
LABOR RATE	LICENSE NO. XYS240	MILEAGE 3,715	COLOR RED/	STOCK NO.
YEAR / MAKE / MODEL 87/PORSCHE/911			DELIVERY DATE 04/30/88	DELIVERY MILES 0
VEHICLE I.D. NO. W P 0 J B 0 9 3 0 H S 0 5 1 3 3 3			SELLING DEALER NO.	PRODUCTION DATE 05/07/87
F. T. E. NO.	P. O. NO.		R. O. DATE 12/05/02	REPRINT# 1
COMMENTS				MO: 3720

TOTALS----------

```
************************************************
*                                              *
*  [ ] CASH     [ ] CHECK    CK NO. [        ] *
*                                              *
*  [ ] VISA     [ ] MASTERCARD    [ ] DISCOVER *
*                                              *
*  [ ] AMER XPRESS    [ ] OTHER    [ ] CHARGE  *
*                                              *
************************************************
```

TOTAL LABOR....	1616.09
TOTAL PARTS....	2530.57
TOTAL SUBLET...	1367.60
TOTAL G.O.G....	0.00
TOTAL MISC CHG.	0.00
TOTAL MISC DISC	0.00
TOTAL TAX.....	465.74
TOTAL INVOICE $	**5980.00**

THANK YOU FOR YOUR BUSINESS!!
SPORTIQUE PORSCHE OF HUNTINGTON

CUSTOMER SIGNATURE

ANY WARRANTIES ON THE PRODUCT SOLD HEREBY ARE THOSE MADE BY THE MANUFACTURER. THE SELLER HEREBY EXPRESSLY DISCLAIMS ALL WARRANTIES, EITHER EXPRESS OR IMPLIED, INCLUDING ANY IMPLIED WARRANTY OF MERCHANTABILITY OR FITNESS FOR A PARTICULAR PURPOSE, AND NEITHER ASSUMES NOR AUTHORIZES ANY OTHER PERSON TO ASSUME FOR IT ANY LIABILITY IN CONNECTION WITH THE SALE OF SAID PRODUCTS.

THESE REPAIRS ARE COVERED BY A LIMITED WARRANTY, LABOR AND PARTS FOR 90 DAYS OR 4000 MILES, WHICHEVER COMES FIRST. WARRANTY REPAIRS TO BE PERFORMED AT SELLER'S PLACE OF BUSINESS.

SELLER HEREBY LIMITS IMPLIED WARRANTIES TO THE PERIOD STATED.

N.Y.S. Reg. Repair Shop No. R 7088918

VEHICLES LEFT AFTER 24 HOURS FROM COMPLETION OF REPAIRS WILL ACCRUE STORAGE CHARGES OF $25.00 A DAY.

TERMS: STRICTLY C.O.D. OR PRIOR APPROVED CREDIT CARD ON BALANCE OVER $2000.00.

X

CUSTOMER ACKNOWLEDGES RECEIPT OF COPY

☐ TELEPHONE AUTHORIZATION APPROVED

Thank you
for this opportunity to serve you.

FORM ERA-LZR-A14 (12-98) Reynolds and Reynolds TO ORDER: www.reysource.com, 1-800-344-0956, fax 1-800-531-9055

CUSTOMER COPY

[END OF INVOICE] 14:31:09

Copyright © 1998 The Reynolds and Reynolds Company
ERAINTINVE SF605366 (12/01)

SPORTIQUE
PORSCHE of Huntington

855 East Jericho Turnpike, Huntington, NY 11743-5697
phone 631.424.1307 fax 631.-424-1312
www.sportique.com service@sportique.com

Dear Valued Customer,

Within a short time, Porsche will be sending you **a New Service Survey.** It is very important to us that you answer: **"10"** or **"YES"** indicating that you were **COMPLETELY SATISFIED.**

If you cannot answer **"10"** or **"YES"** to **ALL** of the questions, it would mean I have not done my job and that would **NEGATIVELY AFFECT** my personal Report Card and the dealership's rating with Porsche.

If anything was not the way you expected, please allow us to address it **IMMEDIATELY, BEFORE YOU RETURN THE SURVEY TO PORSCHE,** or call me at (631) 424-1307 or (631) 427-2708.

Thank you very much,
Bill Dickhut
Service Manager/Customer Relations Manager
Sportique Porsche of Huntington

SAMPLE SURVEY

THIS IS WHAT PORSCHE CARS WILL BE ASKING YOU:

USING A SCALE OF 1-10 WHERE 10 IS OUTSTANDING, 1 IS UNACCEPTABLE: RATING

1. Please rate the dealership's ability to see you within a reasonable amount of time? 10
2. After you arrived, please rate the amount of time spent waiting to speak to someone? 10

HOW WOULD YOU RATE THE SERVICE ADVISOR ON THE FOLLOWING USING THE SAME SCALE OF 1-10, WHERE 10 IS OUTSTANDING, 1 IS UNACCEPTABLE:

3. Treated you with courtesy and respect? 10
4. The amount of time taken to understand your needs? 10
5. Fulfilled all commitments made to you? 10

USING THE SAME SCALE OF 1-10 WHERE 10 IS OUTSTANDING, 1 IS UNACCEPTABLE, PLEASE RATE THE

6. Promptness in having your vehicle ready when promised? 10
7. Availability of parts for service? 10
8. Explanation of repairs to your vehicle? 10
9. Cleanliness and appearance of your vehicle? 10

AGAIN USING A SCALE OF 1-10 WHERE 10 IS OUTSTANDING, 1 IS UNACCEPTABLE,

10. How would you rate the dealer's consideration of your time in picking up the vehicle after the completion of service? 10
11. How would you rate your satisfaction with the quality of work performed? 10
12. Based on your expectations, how would you rate the value of the service you received? 10
13. Overall, were you treated the way you wanted to be treated? (Yes, no response) YES

USING THE SAME SCALE OF 1-10 WHERE 10 IS OUTSTANDING, 1 IS UNACCEPTABLE:

14. Please rate the overall service experience at Sportique Porsche of Huntington. 10

AND FINALLY,

15. How likely are you to recommend this dealership? A

A. Definitely will B. Probably will C. Probably will not D. Definitely will not

4212544

63228

INVOICE

PAGE 1

[redacted]

SPORTIQUE MOTORS LTD.
Authorized Dealer Jaguar • Porsche • Alfa Romeo • Peugeot
1249 E. Jericho Turnpike • Huntington, New York 11743-5697
(516) 427-2222
http://www.sportique.com

N.Y.S. Reg. Repair Shop No. R 1520663

SERVICE ADVISOR: 37 TIM MCKAY

COLOR	YEAR	MAKE/MODEL	VIN	LICENSE	MILEAGE IN/ OUT	TAG
RED	87	PORSCHE 911	WP0JB0930HS051333	XYS240	3681/3682	T442

DEL DATE	PROD. DATE	WARR. EXP.	PROMISED	PO NO.	RATE	PAYMENT	INV. DATE
30APR88	07MAY87		17:00 12FEB98		87.00	CASH	10MAR98

R.O. OPENED	READY	OPTIONS:
12FEB98	10MAR98	DLR:1846 1)NO OPEN CAMPAIGNS (5/22/97)

LINE OPCODE TECH TYPE HOURS	LIST	NET	TOTAL
A CK & REPORT ON RADIO OPERATION.			
MISC INSTALLED NEW STEREO.			
62 CPA 2.50		217.50	217.50
1 911-645-160-AX RENO 1 R	381.67	381.67	381.67
**********			
B CK & REPORT ON MISSING TOOL KIT, COMPRESSOR & RADIO BOOK.			
MISC SUPPLIED TOOL KIT & COMPRESSOR.			
200 IPOS 0.00			(N/C)
1 911-721-002-14 TOOL KIT			(N/C)
1 PNA-113-104-96 HIGH OUT			(N/C)
PARTS ARE REPLACEMENTS FOR COMPRESSOR, TOOL KIT & RADIO BOOK THAT WERE TAKEN FROM CAR.			
**********			
C 74 POINT CHECK			
74 74 POINT CHECK			
62 CPA 0.00		0.00	0.00
**********			

The service team at Sportique thanks you !!!

* Check NYSI + doof needs
will be in before 10am on 9/24
to pay
will be in Friday to P/O car. (9/25)

Parts Warranty: Any Warranties on the products sold hereby are those made by the manufacturers. The seller hereby expressly disclaims all warranties, either express or implied including any implied warranty of merchantability or fitness for a particular purpose and neither assumes nor authorizes any other person to assume for it any liability in connection with the sale of said products.

Labor Guarantee: Limited Guarantee on labor is 90 days or 3,000 miles, whichever occurs first and any implied warranties of merchantability or fitness are limited to the same period.

TERMS: STRICTLY C.O.D. OR PRIOR APPROVED CREDIT CARD ON BALANCE OVER $2000.00

VEHICLES LEFT AFTER 5 DAYS FROM COMPLETION OF REPAIRS WILL ACCRUE STORAGE CHARGES OF $10.00 A DAY.

RECEIVED BY

☐ TELEPHONE AUTHORIZATION APPROVED

DESCRIPTION	TOTALS
LABOR AMOUNT	217.50
PARTS AMOUNT	381.67
GAS, OIL, LUBE	0.00
SUBLET AMOUNT	0.00
MISC. CHARGES	0.00
TOTAL CHARGES	599.17
LESS DISCOUNT	0.00
SALES TAX	49.43
PLEASE PAY THIS AMOUNT	648.60

$ 1056.04 $ 1621.04

CUSTOMER COPY

4212544

63975

INVOICE

PAGE 1

SPORTIQUE MOTORS LTD.
Authorized Dealer Jaguar • Porsche • Alfa Romeo • Peugeot
1249 E. Jericho Turnpike • Huntington, New York 11743-5697
(516) 427-2222
http://www.sportique.com

N.Y.S. Reg. Repair Shop No. R 1520663

SERVICE ADVISOR: 11 PETER KNUDSEN

COLOR	YEAR	MAKE/MODEL	VIN	LICENSE	MILEAGE IN/ OUT	TAG
RED	87	PORSCHE 911	WP0JB0930HS051333	XYS240	3682/3682	T442

DEL DATE	PROD. DATE	WARR. EXP.	PROMISED	PO NO.	RATE	PAYMENT	INV. DATE
30APR88	07MAY87		17:00 06APR98		87.00	CASH	10APR98

R.O. OPENED	READY	OPTIONS:
06APR98	10APR98	DLR:1846 1)NO OPEN CAMPAIGNS (5/22/97)

LINE OPCODE TECH TYPE HOURS	LIST	NET	TOTAL
A REPAIR FRONT HOOD , REPLACE HOOD BADGE			
MISC REPAIR HOOD AND INSTALL NEW HOOD BADGE			
200 CPA 0.00		0.00	0.00
2 999-591-423-03 BOLT M8X	2.20	1.32	2.64
1 901-559-215-20 HOOD BAD	4.68	4.68	4.68
1 901-559-210-20 HOOD BAD	41.00	41.00	41.00
SUBL DELTA AUTOBODY			
CPA		570.00	570.00
SUBL SPORTIQUE TOW TO DELTA AUTOBODY			
CPA		280.00	280.00

****

The service team at Sportique thanks you !!!

SPORTIQUE MOTORS LTD.

PAID

Parts Warranty: Any Warranties on the products sold hereby are those made by the manufacturers. The seller hereby expressly disclaims all warranties, either express or implied including any implied warranty of merchantability or fitness for a particular purpose and neither assumes nor authorizes any other person to assume for it any liability in connection with the sale of said products.

Labor Guarantee: Limited Guarantee on labor is 90 days or 3,000 miles, whichever occurs first and any implied warranties of merchantability or fitness are limited to the same period.

TERMS: STRICTLY C.O.D. OR PRIOR APPROVED CREDIT CARD ON BALANCE OVER $2000.00

VEHICLES LEFT AFTER 5 DAYS FROM COMPLETION OF REPAIRS WILL ACCRUE STORAGE CHARGES OF $10.00 A DAY.

TELEPHONE AUTHORIZATION APPROVED

DESCRIPTION	TOTALS
LABOR AMOUNT	0.00
PARTS AMOUNT	48.32
GAS, OIL, LUBE	0.00
SUBLET AMOUNT	850.00
MISC. CHARGES	0.00
TOTAL CHARGES	898.32
LESS DISCOUNT	0.00
SALES TAX	74.12
PLEASE PAY THIS AMOUNT	972.44

CUSTOMER COPY

4212544

66701

INVOICE

PAGE 1

SPORTIQUE MOTORS LTD.
Authorized Dealer Jaguar • Porsche • Alfa Romeo • Peugeot
1249 E. Jericho Turnpike • Huntington, New York 11743-5697
(516) 427-2222
http://www.sportique.com

N.Y.S. Reg. Repair Shop No. R 1520663

SERVICE ADVISOR: 47 JENNIFER MAGNES

COLOR	YEAR	MAKE/MODEL	VIN	LICENSE	MILEAGE IN/ OUT	TAG
RED	87	PORSCHE 911	WP0JB0930HS051333	XYS240	3688/3688	T3918

DEL DATE	PROD. DATE	WARR. EXP.	PROMISED	PO NO.	RATE	PAYMENT	INV. DATE
30APR88	07MAY87		17:00 23SEP98		87.00	CASH	24SEP98

R.O. OPENED	READY	OPTIONS:
23SEP98	24SEP98	DLR:1846 1)NO OPEN CAMPAIGNS (5/22/97)

LINE OPCODE TECH TYPE HOURS	LIST	NET	TOTAL
A NEW YORK STATE INSPECTION			
NYSI NEW YORK STATE INSPECTION			
62 CSI 0.50		35.00	35.00

****

MAKE AN APPOINTEMENT FOR YOUR VEHILCE IN OUR
DETAIL CENTER
EXPERT DETAILING AND RECONDITIONING OF CARS,
SPORT UTILITY VEHICLES & VANS
ALL MAKES AND MODELS

SPORTIQUE MOTORS LTD.

PAID

Parts Warranty: Any Warranties on the products sold hereby are those made by the manufacturers. The seller hereby expressly disclaims all warranties, either express or implied including any implied warranty of merchantability or fitness for a particular purpose and neither assumes nor authorizes any other person to assume for it any liability in connection with the sale of said products.

Labor Guarantee: Limited Guarantee on labor is 90 days or 3,000 miles, whichever occurs first and any implied warranties of merchantability or fitness are limited to the same period.

TERMS: STRICTLY C.O.D. OR PRIOR APPROVED CREDIT CARD ON BALANCE OVER $2000.00

VEHICLES LEFT AFTER 5 DAYS FROM COMPLETION OF REPAIRS WILL ACCRUE STORAGE CHARGES OF $10.00 A DAY.

RECEIVED BY _____

☐ TELEPHONE AUTHORIZATION APPROVED

DESCRIPTION	TOTALS
LABOR AMOUNT	35.00
PARTS AMOUNT	0.00
GAS, OIL, LUBE	0.00
SUBLET AMOUNT	0.00
MISC. CHARGES	0.00
TOTAL CHARGES	35.00
LESS DISCOUNT	0.00
SALES TAX	0.00
PLEASE PAY THIS AMOUNT	35.00

CUSTOMER COPY

4212544

58997

INVOICE

DUPLICATE 1
PAGE 1

SPORTIQUE MOTORS LTD.
Authorized Dealer Jaguar • Porsche • Alfa Romeo • Peugeot
1249 E. Jericho Turnpike • Huntington, New York 11743-5697
(516) 427-2222
http://www.sportique.com

N.Y.S. Reg. Repair Shop No. R 1520663

SERVICE ADVISOR: 11 PETER KNUDSEN

COLOR	YEAR	MAKE/MODEL	VIN	LICENSE	MILEAGE IN/ OUT	TAG
RED	87	PORSCHE 911	WP0JB0930HS051333	XYS240	3627/3627	T8883

DEL DATE	PROD. DATE	WARR. EXP.	PROMISED	PO NO.	RATE	PAYMENT	INV. DATE
30APR88	07MAY87		17:00 22MAY97		87.00	CASH	20JUN97

R.O. OPENED	READY	OPTIONS:
22MAY97	20JUN97	DLR:1846 1)NO OPEN CAMPAIGNS (5/22/97)

LINE OPCODE TECH TYPE HOURS	LIST	NET	TOTAL
A NEW YORK STATE INSPECTION			
NYSI NEW YORK STATE INSPECTION			
26 CSI 0.50		19.00	19.00
**********			
B OIL CHANGE AND 1 FILTER, SYN OIL-92 911 & OLDER(EST. $185.00+TAX)			
1112P OIL CHANGE AND 1 FILTER, SYN OIL-92 911 & OLDER(EST. $185.00+TAX)			
26 CPA 1.00		87.00	87.00
1 930-107-764-00 OIL FILT	8.00	8.00	8.00
10 E45 ENGINE OIL	2.00	2.00	20.00
1 900-123-118-30 SEAL RIN	0.43	0.43	0.43
1 900-123-011-20 SEAL RIN	0.43	0.43	0.43
2 E45 ENGINE OIL	2.00	2.00	4.00
**********			
C CK AND REPORT SHIFTER FROZEN			
MISC REPLACE CLUTCH AND FLYWHEEL			
26 CPA 9.00		783.00	783.00
1 930-116-911-00 CLUTCH R	875.00	875.00	875.00
1 930-375-011-01 ENGINE S	71.00	71.00	71.00
1 930-102-213-00 FLYWHEEL	487.73	487.73	487.73
1 5089 BRAKLEEN	5.90	5.90	5.90
WIP PART WARRANTY REPLACE DIFECTIVE CLUTCH COVER AND BEARING			
26 WP 0.00			(N/C)
1 930-116-021-03 PRESSURE			(N/C)
1 930-116-081-11 RELEASE			(N/C)
**********			
D EST DAMAGE TO L/S WHEEL WELL			
MISC REPAIR DENT TO R/F FENDER			
200 CPA 0.00		0.00	0.00
SUBL DELTA BODY SHOP			
CPA		495.00	495.00
SUBL SPORTIQUE TOW			
CPA		300.00	300.00

Parts Warranty: Any Warranties on the products sold hereby are those made by the manufacturers. The seller hereby expressly disclaims all warranties, either express or implied including any implied warranty of merchantability or fitness for a particular purpose and neither assumes nor authorizes any other person to assume for it any liability in connection with the sale of said products.

Labor Guarantee: Limited Guarantee on labor is 90 days or 3,000 miles, whichever occurs first and any implied warranties of merchantability or fitness are limited to the same period.

TERMS: STRICTLY C.O.D. OR PRIOR APPROVED CREDIT CARD ON BALANCE OVER $2000.00

VEHICLES LEFT AFTER 5 DAYS FROM COMPLETION OF REPAIRS WILL ACCRUE STORAGE CHARGES OF $10.00 A DAY.

RECEIVED BY _____

☐ TELEPHONE AUTHORIZATION APPROVED

DESCRIPTION	TOTALS
LABOR AMOUNT	
PARTS AMOUNT	
GAS, OIL, LUBE	
SUBLET AMOUNT	
MISC. CHARGES	
TOTAL CHARGES	
LESS DISCOUNT	
SALES TAX	
PLEASE PAY THIS AMOUNT	

CUSTOMER COPY

4212544

58997

INVOICE

DUPLICATE 1
PAGE 2

[redacted]

SPORTIQUE MOTORS LTD.
Authorized Dealer Jaguar • Porsche • Alfa Romeo • Peugeot
1249 E. Jericho Turnpike • Huntington, New York 11743-5697
(516) 427-2222
http://www.sportique.com

N.Y.S. Reg. Repair Shop No. R 1520663

SERVICE ADVISOR: 11 PETER KNUDSEN

COLOR	YEAR	MAKE/MODEL	VIN	LICENSE	MILEAGE IN/ OUT	TAG
RED	87	PORSCHE 911	WP0JB0930HS051333	XYS240	3627/3627	T8883

DEL DATE	PROD. DATE	WARR. EXP.	PROMISED	PO NO.	RATE	PAYMENT	INV. DATE
30APR88	07MAY87		17:00 22MAY97		87.00	CASH	20JUN97

R.O. OPENED	READY	OPTIONS:
22MAY97	20JUN97	DLR:1846 1)NO OPEN CAMPAIGNS (5/22/97)

LINE	OPCODE	TECH	TYPE	HOURS	LIST	NET	TOTAL

The service team at Sportique thanks you !!!

SPORTIQUE MOTORS

664.25
~~300.00~~ CK
2915.33
3719 465 1287 6009
10/98
2915.93

Parts Warranty: Any Warranties on the products sold hereby are those made by the manufacturers. The seller hereby expressly disclaims all warranties, either express or implied including any implied warranty of merchantability or fitness for a particular purpose and neither assumes nor authorizes any other person to assume for it any liability in connection with the sale of said products.

Labor Guarantee: Limited Guarantee on labor is 90 days or 3,000 miles, whichever occurs first and any implied warranties of merchantability or fitness are limited to the same period.

TERMS: STRICTLY C.O.D. OR PRIOR APPROVED CREDIT CARD ON BALANCE OVER $2000.00

VEHICLES LEFT AFTER 5 DAYS FROM COMPLETION OF REPAIRS WILL ACCRUE STORAGE CHARGES OF $10.00 A DAY.

RECEIVED BY _____

☐ TELEPHONE AUTHORIZATION APPROVED

DESCRIPTION	TOTALS
LABOR AMOUNT	889.00
PARTS AMOUNT	1472.49
GAS, OIL, LUBE	0.00
SUBLET AMOUNT	795.00
MISC. CHARGES	0.00
TOTAL CHARGES	3156.49
LESS DISCOUNT	0.00
SALES TAX	258.84
PLEASE PAY THIS AMOUNT	3415.33

CUSTOMER COPY

4212544

61115

INVOICE

DUPLICATE 1
PAGE 1

SPORTIQUE MOTORS LTD.
Authorized Dealer Jaguar • Porsche • Alfa Romeo • Peugeot
1249 E. Jericho Turnpike • Huntington, New York 11743-5697
(516) 427-2222
http://www.sportique.com

N.Y.S. Reg. Repair Shop No. R 1520663

SERVICE ADVISOR: 45 THOMAS DRAKE

COLOR	YEAR	MAKE/MODEL	VIN	LICENSE	MILEAGE IN/ OUT	TAG
RED	87	PORSCHE 911	WP0JB0930HS051333	XYS240	3628/3628	

DEL DATE	PROD. DATE	WARR. EXP.	PROMISED	PO NO.	RATE	PAYMENT	INV. DATE
30APR88	07MAY87		17:00 24SEP97		87.00	CASH	30SEP97

R.O. OPENED	READY	OPTIONS:
24SEP97	30SEP97	DLR:1846 1)NO OPEN CAMPAIGNS (5/22/97)

LINE OPCODE TECH TYPE HOURS	LIST	NET	TOTAL
A DOOR LOCK			
MISC REPAIR DOOR LOCK L/S			
26 IPOU 0.00			(N/C)
1 964-613-134-00 DOOR LOC			(N/C)
1 911-538-941-06 DOOR LOC			(N/C)
1 964-347-917-00 IGNITION			(N/C)

****

The service team at Sportique thanks you !!!

SPORTIQUE MOTORS LTD.

Parts Warranty: Any Warranties on the products sold hereby are those made by the manufacturers. The seller hereby expressly disclaims all warranties, either express or implied including any implied warranty of merchantability or fitness for a particular purpose and neither assumes nor authorizes any other person to assume for it any liability in connection with the sale of said products.

Labor Guarantee: Limited Guarantee on labor is 90 days or 3,000 miles, whichever occurs first and any implied warranties of merchantability or fitness are limited to the same period.

TERMS: STRICTLY C.O.D. OR PRIOR APPROVED CREDIT CARD ON BALANCE OVER $2000.00

VEHICLES LEFT AFTER 5 DAYS FROM COMPLETION OF REPAIRS WILL ACCRUE STORAGE CHARGES OF $10.00 A DAY.

RECEIVED BY _____

☐ TELEPHONE AUTHORIZATION APPROVED

DESCRIPTION	TOTALS
LABOR AMOUNT	0.00
PARTS AMOUNT	0.00
GAS, OIL, LUBE	0.00
SUBLET AMOUNT	0.00
MISC. CHARGES	0.00
TOTAL CHARGES	0.00
LESS DISCOUNT	0.00
SALES TAX	0.00
PLEASE PAY THIS AMOUNT	0.00

CUSTOMER COPY

4212544

61645

INVOICE

PAGE 1

[redacted]

SPORTIQUE MOTORS LTD.

Authorized Dealer Jaguar • Porsche • Alfa Romeo • Peugeot
1249 E. Jericho Turnpike • Huntington, New York 11743-5697
(516) 427-2222
http://www.sportique.com

N.Y.S. Reg. Repair Shop No. R 1520663

SERVICE ADVISOR: 11 PETER KNUDSEN

COLOR	YEAR	MAKE/MODEL	VIN	LICENSE	MILEAGE IN/ OUT	TAG
RED	87	PORSCHE 911	WP0JB0930HS051333	XYS240	3628/3628	

DEL DATE	PROD. DATE	WARR. EXP.	PROMISED	PO NO.	RATE	PAYMENT	INV. DATE
30APR88	07MAY87		17:00 24OCT97		87.00	CASH	24OCT97

R.O. OPENED	READY	OPTIONS:
24OCT97	24OCT97	DLR:1846 1)NO OPEN CAMPAIGNS (5/22/97)

LINE OPCODE TECH TYPE HOURS	LIST	NET	TOTAL
A CK AND REPORT BATTERY DEAD			
MISC INSTALL BATTERY			
96 ERIC WHITE LIC#: OT32			
CPA 0.00		0.00	0.00
1 999-611-088-07 BATTERY,	151.73	151.73	151.73

****

The service team at Sportique thanks you !!!

SPORTIQUE MOTORS LTD.

Parts Warranty: Any Warranties on the products sold hereby are those made by the manufacturers. The seller hereby expressly disclaims all warranties, either express or implied including any implied warranty of merchantability or fitness for a particular purpose and neither assumes nor authorizes any other person to assume for it any liability in connection with the sale of said products.

Labor Guarantee: Limited Guarantee on labor is 90 days or 3,000 miles, whichever occurs first and any implied warranties of merchantability or fitness are limited to the same period.

TERMS: STRICTLY C.O.D. OR PRIOR APPROVED CREDIT CARD ON BALANCE OVER $2000.00

VEHICLES LEFT AFTER 5 DAYS FROM COMPLETION OF REPAIRS WILL ACCRUE STORAGE CHARGES OF $10.00 A DAY.

RECEIVED BY _____

☐ TELEPHONE AUTHORIZATION APPROVED

DESCRIPTION	TOTALS
LABOR AMOUNT	0.00
PARTS AMOUNT	151.73
GAS, OIL, LUBE	0.00
SUBLET AMOUNT	0.00
MISC. CHARGES	0.00
TOTAL CHARGES	151.73
LESS DISCOUNT	0.00
SALES TAX	12.52
PLEASE PAY THIS AMOUNT	164.25

CUSTOMER COPY

FAHRZG. - IDENT-NR.
VEHICLE - IDENT - NO.

TYP / TYPE

MOTORKB. / GETR. KB.
ENG. CODE / TRANS. CODE

LACKNR. / INNENAUSST.
PAINT NO. / INTERIOR

M. - AUSST. / OPTIONS

107-8068

P07B0 93.HS051333

930 780

73068 68H 73068

L80K L.E

C02 010 137 150 220

340 383 387 503 496

GENUINE
PORSCHE
FLOOR MATS